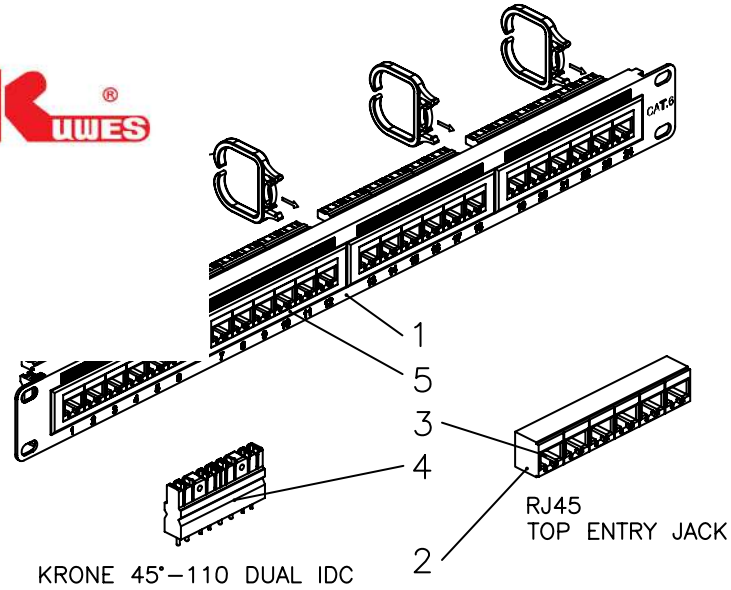

SCALE 1/4

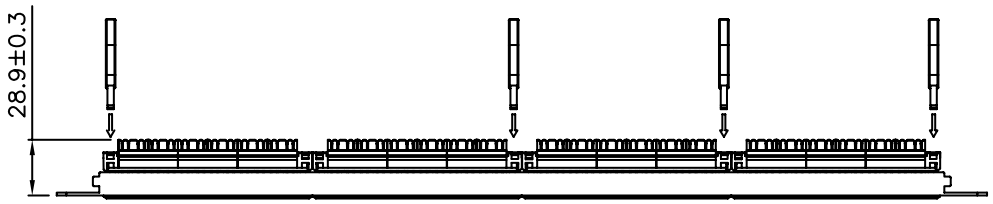

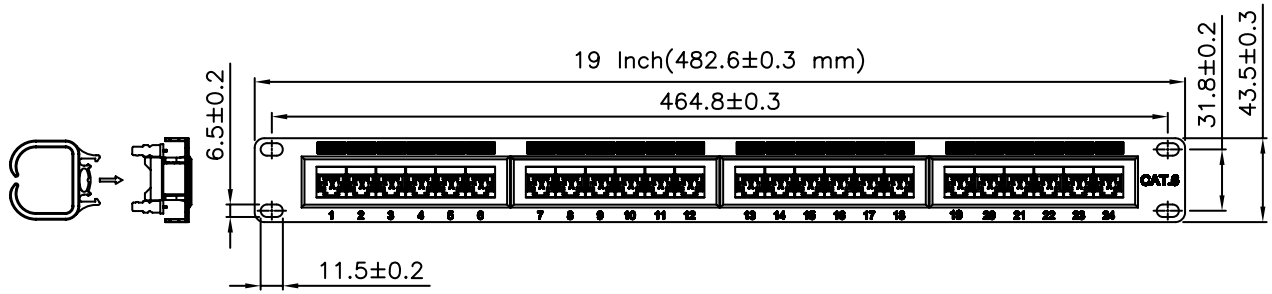

Specifications :

Material :
1. Panel : SPCC, 1.5 mm thickness with Black(RAL 9005) color painted.
2. RJ45 Jack :
   2–1. Housing : ABS, UL 94V–0.
   2–2. Contact Bracket : PC, UL 94V–2, Transparent color.
3. RJ45 Jack Contact :
   3–1. Material : Phosphor Bronze with Nickel plated.
   3–2. Finish : 50 micro–inch Gold plated on Plug contact area.
4. IDC
   4–1. Housing : PC+Glass Fiber, UL 94V–2.
   4–2. Terminal : Phosphor Bronze with Tin plated.
5. Jack Bracket Set : ABS, UL 94V–0.
6. Cable Holder : Nylon.
7. PCB : FR4, UL 94V–0.

Performance :
a. T568A & T568B wiring.
b. Insertion force : 20N max. (IEC 60603–7–4)
c. Retention strength : 7.7 kg between Jack and Plug.
d. Operating temperature : –10°C to 60°C. (ISO/IEC 11801, ANSI/TIA/EIA 568 B.2)
e. Life(mating cycles) :
   *Jack : 750 cycles min. (ISO/IEC 11081, IEC 60603–7–4)
   *IDC : Suitable for 22–26 AWG stranded and solid wire, compatible with both 110 & Krone punch down tools.
f. The Cat.6 transmission performance is in compliance with the ANSI/TIA/EIA 568 B.2–1 standard.

CAT.6 6 PORT PCB MODULE

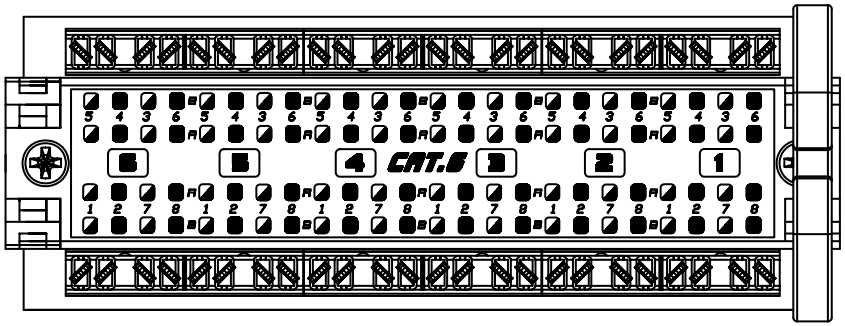

SCALE 1/1

GENERAL TOLERANCE OF DIMENSIONS X.XXX ±0.005 X.XX ±0.05 X.X ±0.1	DRAWING	01.JUN.2010	MARK	KUWES IND. CORP.
	CHECK	01.JUN.2010	JANE	
	APPROVAL	01.JUN.2010	JAIMY	
		DATE	NAME	ITEM NO.: AKS24T–KAA–C6C
	SCALE 1/4 (A4)	UNIT	mm	DES.: CAT.6 UNSHIELDED PATCH PANEL
	DRAWING NO.	AKS24T–KAA–C6C		A3
	DRAWING CLASSIFICATION	S	SHEET 1 OF 1	